DS-2CE16D8T-(A)IT3ZF
2 MP Ultra-Low Light Bullet Camera

Key Features

- 2 MP high performance CMOS
- Ultra-low light
- 1920 × 1080 resolution
- 2.7 mm to 13.5 mm varifocal lens, auto focus
- 130 dB true WDR, 3D DNR
- Smart IR, up to 80 m IR distance
- 4 in 1 video output (switchable TVI/AHD/CVI/CVBS)
- IP67
- Up the coax (HIKVISION-C)

Specification

Camera	
Image Sensor	2 MP CMOS
Signal System	PAL/NTSC
Resolution	1920 (H) × 1080 (V)
Frame Rate	PAL: 1080p@25fps NTSC: 1080p@30fps
Min. Illumination	Color: 0.003 Lux @ (F1.2, AGC ON), 0 Lux with IR
Shutter Time	PAL: 1/25 s to 1/50, 000 s NTSC: 1/30 s to 1/50, 000 s
Slow Shutter	MAX. 16 times
Lens	2.7 mm to 13.5 mm motorized, auto focus
Horizontal Field of View	103° to 32.1°
Lens Mount	Φ14
Day & Night	ICR
WDR (Wide Dynamic Range)	≥ 130 dB
Angle Adjustment	Pan: 0° to 360°, Tilt: 0° to 90°, Rotate: 0° to 360°
Menu	
Image Mode	STD/HIGH-SAT
AGC	Yes
Day/Night Mode	Auto/Color/BW (Black and White)
White Balance	Auto/Manual
AE (Auto Exposure) Mode	WDR/BLC/HLC/Global
Privacy Mask	4 programmable privacy masks
Motion Detection	4 programmable motion areas
NR (Noise Reduction)	3D DNR/2D DNR
Language	English
Functions	Brightness, Sharpness, Mirror, Smart IR
Interface	
Video Output	Switchable TVI/AHD/CVI/CVBS
General	
Operating Conditions	-40 °C to 60 °C (-40 °F to 140 °F), humidity: 90% or less (non-condensing)
Power Supply	12 VDC ±25%, 24 VAC ±25% **You are recommended to use one power adapter to supply the power for one camera.*
Power Consumption	Max. 7.5W, -A: Max. 9W
Ingress Protection	IP67
Material	Metal
IR Range	Up to 80 m
Communication	HIKVISION-C
Dimensions	85 mm × 92 mm × 269.6 mm (3.3" × 3.6" × 10.6")
Weight	Approx. 910 g (2.01 lb.), -A: Approx. 940 g (2.07 lb.)

Order Models

DS-2CE16D8T-AIT3ZF

DS-2CE16D8T-IT3ZF

Dimension

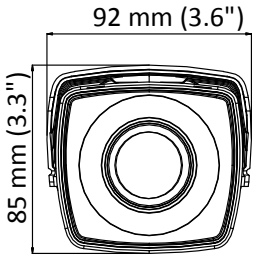

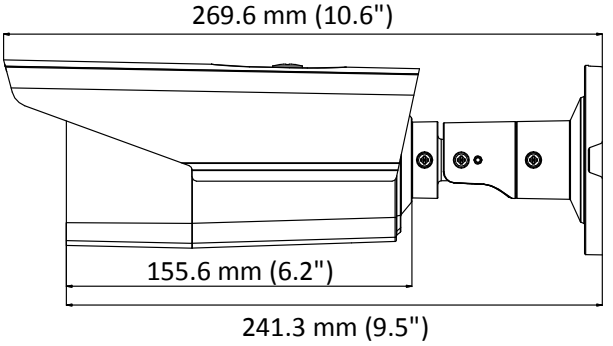

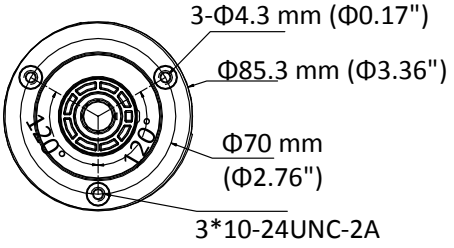

Accessory

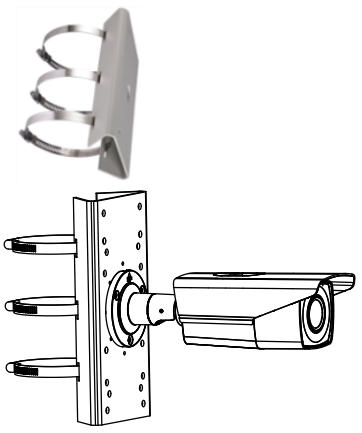

DS-1275ZJ-SUS

Vertical pole mount

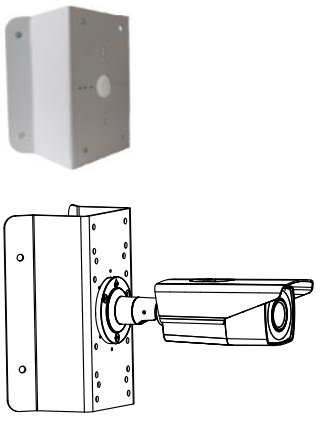

DS-1276ZJ-SUS

Corner mount

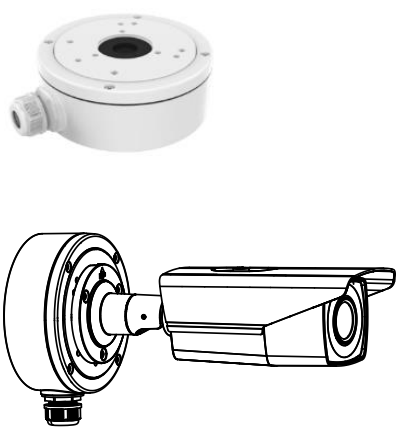

DS-1280ZJ-S

Junction box